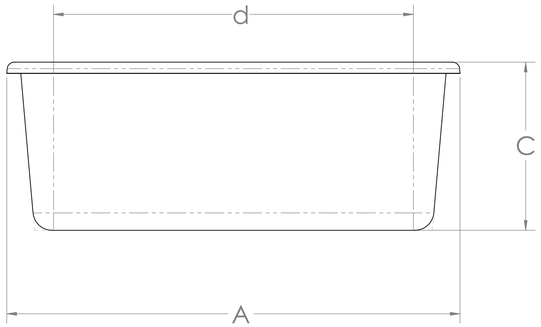

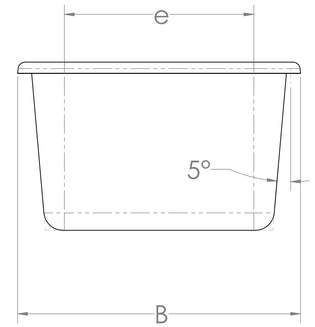

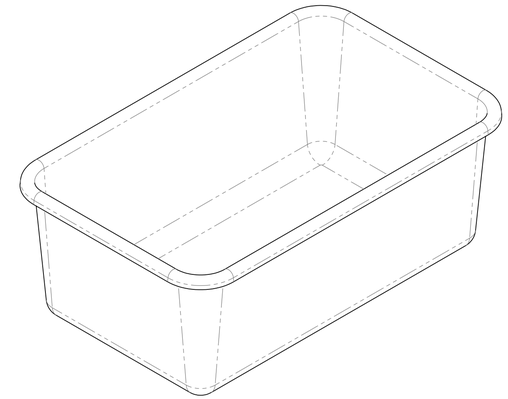

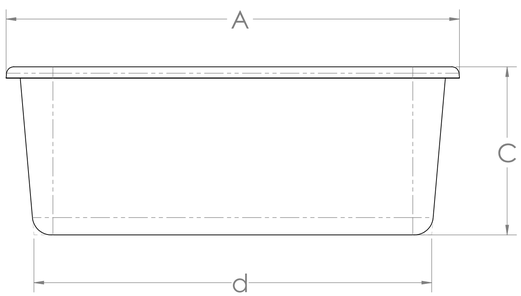

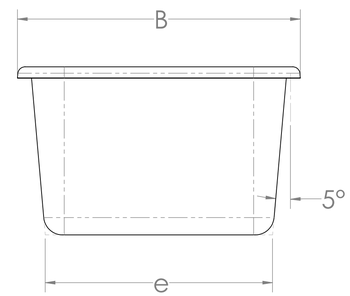

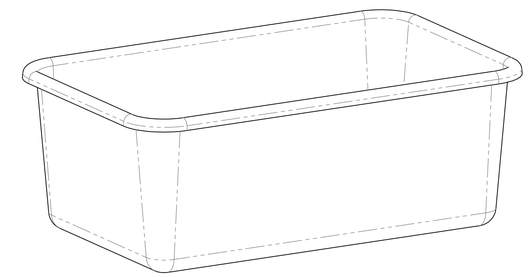

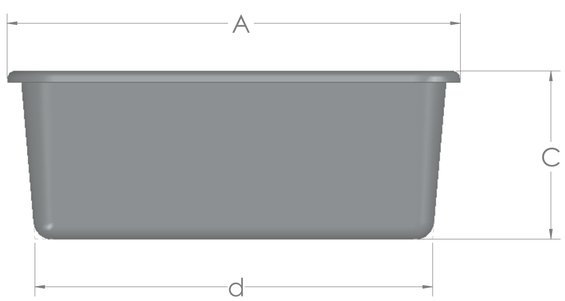

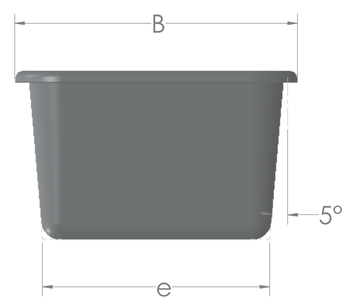

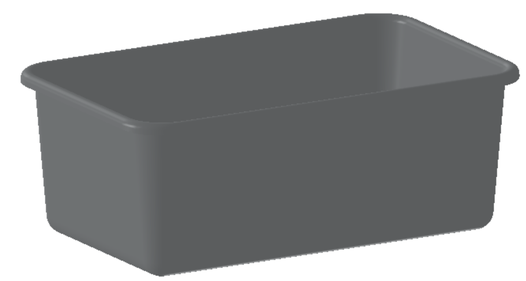

REV

tub2

D